PCA1
2X15 Watt Stereo Power Amplifier

www.pyleaudio.com

Your New Pyle Pro Amplifier gives you the power and versatility you need in a professional sound system.
The amplifier's wide frequency response makes it suitable for amplifying music or vocal program material.

PCA1 can compatible with walkman and computerize devices (MP3) via 3.5mm to RCA converter.

Please read this manual thoroughly before you attempt to set up and use the amplifier. It contains a range of installation suggestions as well as instructions to ensure safe usage.
Installed properly, you can expect years of trouble-free service from this product.

TABLE OF CONTENTS

1.Features and Controls
2.Caring for your Pyle Pro Amplifier
3.Trouble shooting
4.Limited warranty adn Specifications

CAUTION

RISK OF ELECTRIC SHOCK
DO NOT OPEN

WARNING: To reduce the risk of " re or shock hazard, do not expose this product to rain or moisture

CAUTION: TO REDUCE THE RISK OF ELECTRIC SHOCK, DO NOT REMOVE THE COVER OR BACK. NO USER-SERICEABLE PARTS INSIDE. REFER SERVICING TO QUALIFIED PERSONNEL.

The lightning symbol is intended to alert you to the presence of uninsulated, dangerous voltage within this product's enclosure that might be of suf" cient magnitude to constitute a risk of electric shock. Do not open the product's case.

The exclamation symbol is intended to inform you that important operating and maintenace instructions are included in the literature accompanhing this product.

Features and controls

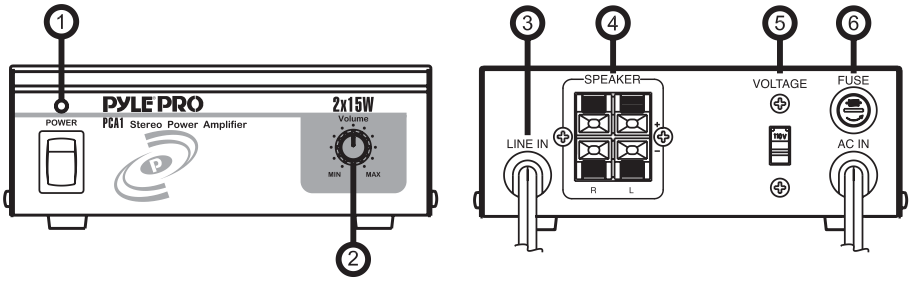

1. Power ON LED Indicator
   -Lights to indicate power is turned on.

2. Master Volume Control
   -Lets you adjust the overall sound level.

3. RCA Cable L/R LINE Input
   -Lets you to connect the desired LINE input source.

4. PUSH TYPE SPEAKER L/R TERMINALS
   -Lets you easily connect speaker wires directly to the Amplifier.

5. Voltage Selector
   -Lets you select the voltage of AC power input source. The amplifier has selectable input voltage from 110V/60Hz which is the standard in USA and CANADA. You can also switch the input voltage to 230V/50Hz for EUROPEAN operation. Please make sure the switch is in the proper position before operating, otherwise severe damage will result not cover by the warrnaty. Please also replace the fuse with proper rating in this situation (see the next instruction for the fuse rating).

6. Fuse
   -The amplifier uses a fuse for protection against surges and shor circuit. If the amplifier suddenly turns off and will not turn on, check the fuse, If necessary, replace it with a 1-amp, 250-volt, fast-acting, 5 x 20mm fuse (not supplied).

CARING FOR YOUR PYLE PRO AMPLIFIER

Your Pyle Pro Amplifier is an example of superior design and craftsmanship. The following suggestions will help you care for your amplifier so you can enjoy years of use :
*Keep the amplifier dry. If it gets wet, wipe immediately.
*Use the amplifier only in well-ventilated installations.
*Handle the amplifier away from dust and dirt.
*Wipe occasionally with a damp cloth to keep it looking new.
Do not use harsh chemical, solvents or detergents!

IMPORTANT
Replacing a fuse
This amplifier requires a fuse with the proper rating for protection from power surges and short circuits. If the amplifier suddenly turns off or will not turn on. the fuse is properly blown.

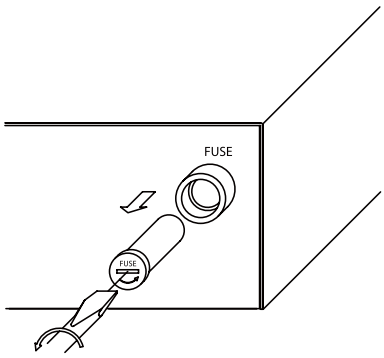

*Let the amplifier cool down and see if it start again before you assume a fuse needs to be replaced.
*Unplug the amplifier from the AC outlet.
*Turn the fuse holder cap and pull out the cap.
*Remove the old fuse and replace it with an identical one.

CAUTION : Never use a fuse with a higher rating.

TROUBLE SHOOTING

No power	The fuse might be blown.	Check the amplifier's fuse and replace it if necessary.
No sound	Sound source or speakers not connected properly.	Check all connections.
	MASTER volume control set to minimum.	Adjust the volume control to desired setting.
	The speaker's wire might be the wrong impedance.	Make sure all connected speakers have the same impedance rating.
	The amplifier might has shut down.	Turn the amplifier off and let it cool. Make sure the amplifier is properly ventilated, and then turn it back on.

Limited warranty

All PYLE PRO products are carefully constructed and tested before shipment. Units purchased in the USA are warranted to be free of defects in material and workmanship for one (1) year from the date of purchase. This warranty is limited to the original retall purchaser of the amplifier.

Should the unitfall due to factory defects in material or workmanship,your unit well be repaired or replaced at the sole discretion of PYLE.

To obtain warranty service, you must first call our Consumer Return Hotline at (718) 236-6948 to obtain a Return Authorization Number.
This R.A # must appear on the outside of your package and on all paperwork relating to your return.

When returning the unit to us for warranty service, it must be carefully packed and shipped, prepaid, to:

PYLE® PRO

R.A.#: _____
PYLE PRO Service Center
1600 63rd Street
Brooklyn, NY 11204

You must also include the following items with your return:

- A copy of your sales receipt or other proof of purchase
- A brief letter, indicating the problem you are experiencing with the product
- Include in your return address, daytime phone number and R.A. number
- Also include a check or money order for $20.00 for return shipping, handling and insurance, or provide your Visa/ MC number with expiration date.

Our obligation under this warranty is limited to the repair or replacement of the defective unit when it is returned to us prepaid. This warranty will be considered void if the unit was tampered with, improperly serviced or subject to misuse, neglect or accidental damage.-

SPECIFICATIONS

Output power, 2 channels driven	
4-OHM, 1 KHz, 1% THD.	3.0Wx2
4-OHM, 1 KHz, 10% THD.	2.2Wx2
Peak Power	5Wx2
Total Harmonic Distortion, 1 KHz Rated Power	0.3 %
Input Sensitivity, 1 KHz ,4-ohm Rated Power	150mV
Frequency Response	20Hz - 40KHz
Signal to Noise Ratio	75dB
Power Requirement	120V AC 60Hz or 230V AC 50Hz
Dimensions	142.6x55x107mm (WxHxD)