Driver Specification Sheet

Model No:: D19TD05-08
Product Line: Tymphany

Rev: 1
Last Update: 2017-04-25 14:32:09

Product Description

This D family tweeter features an 8ohm 19mm voice coil, a treated fabric dome, with a ferrite magnet and a ABS faceplate, and ferrofluid in the gap of the ferrite magnet motor, providing enhanced cooling of the voice coil. Is designed to be a high performance transducer.

Mechanical Drawing

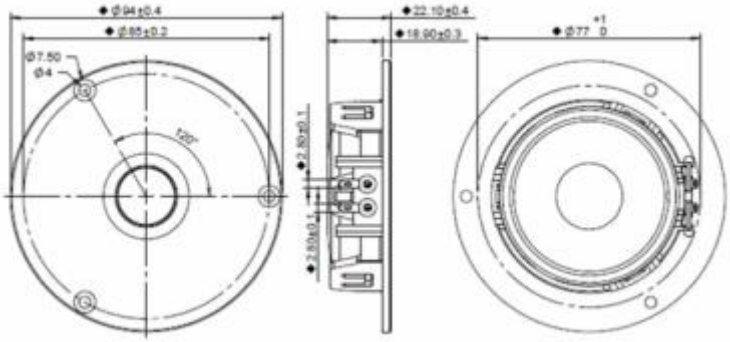

Specifications

DC Resistance	Revc	Ohms	6.33	5.0%	Energy Bandwidth Product	EBP	(1/Qes)*fs	
Minimum Impedance	Zmin	Ohms	7.64	7.5%	Moving Mass	Mms	g	0.2
Voice Coil Inductance	Le	mH	0.02		Suspension Compliance	Cms	um/N	43.4
Resonant Frequency	Fs	Hz	1687.93	15%	Effective Cone diameter	D	cm	2.3
Mechanical Q Factor	Qms		1.08		Effective Piston Area	Sd	cm^2	4.2
Electrical Q Factor	Qes	1.94			Effective Volume	Vas	L	0
Total Q Factor	Qts		0.69		Motor Force Factor	BL	Tm	2.66
Ratio Fs/Qts	F	Fs/Qts	2432.18		Motor Efficiency Factor	ß	(T*M^2)/Ohms	1.1
Half Space Sensitivity @2.83V	db@2.83V/1M	dB	87.74	+/- 1.0db	Voice coil former Material	VCfm		ASV
Half Space Sensitivity @1W/1M	db@1W/1M	dB	87.5	+/- 1.0db	Voice coil inner diameter	VCd	mm	19.35
Gap Height	Gh	mm	2		Rated Noise Power	P	W	100
Maximum Linear Excursion	Xmax	mm	0.4		Test Spectrum Bandwidth	1KHz-20KHz		
Ferrofluid Type	FF		APG087		Driver Size	Inch	19 mm	
Driver Mass	Kg	0.28						

Frequency and Impedance Response

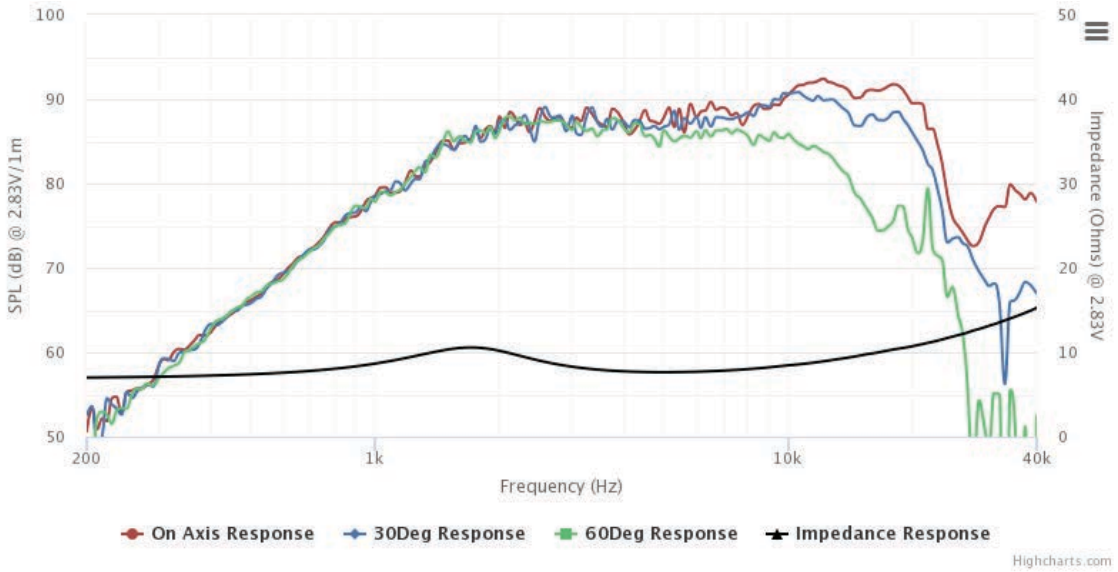

Tymphany HK LTD
Address : Room 1307-8 Dominion Centre, 43-59 Queens Rd East, Wanchai, Hong Kong
E-mail: sales@tymphany.com